Please check the examination details below before entering your candidate information

Candidate surname	Other names

Pearson Edexcel Level 3 GCE

Centre Number | Candidate Number

Monday 19 October 2020

Afternoon | Paper Reference **9MA0/32**

Mathematics

Advanced

Paper 32: Mechanics

You must have:
Mathematical Formulae and Statistical Tables (Green), calculator

Total Marks

Candidates may use any calculator allowed by Pearson regulations. Calculators must not have the facility for symbolic algebra manipulation, differentiation and integration, or have retrievable mathematical formulae stored in them.

Instructions

- Use **black** ink or ball-point pen.
- If pencil is used for diagrams/sketches/graphs it must be dark (HB or B).
- **Fill in the boxes** at the top of this page with your name, centre number and candidate number.
- Answer **all** questions and ensure that your answers to parts of questions are clearly labelled.
- Answer the questions in the spaces provided – *there may be more space than you need.*
- You should show sufficient working to make your methods clear. Answers without working may not gain full credit.
- Unless otherwise indicated, whenever a value of g is required, take $g = 9.8$ m s^{-2} and give your answer to either 2 significant figures or 3 significant figures.

Information

- A booklet 'Mathematical Formulae and Statistical Tables' is provided.
- The total mark for this part of the examination is 50. There are 5 questions.
- The marks for **each** question are shown in brackets – *use this as a guide as to how much time to spend on each question.*

Advice

- Read each question carefully before you start to answer it.
- Try to answer every question.
- Check your answers if you have time at the end.

Turn over

©2020 Pearson Education Ltd.
1/1/1/1/1/1/

P 6 6 7 8 9 A 0 1 2 0

Pearson

1. A rough plane is inclined to the horizontal at an angle α, where $\tan\alpha = \frac{3}{4}$

A brick P of mass m is placed on the plane.

The coefficient of friction between P and the plane is μ

Brick P is in equilibrium and on the point of sliding down the plane.

Brick P is modelled as a particle.

Using the model,

(a) find, in terms of m and g, the magnitude of the normal reaction of the plane on brick P

(2)

(b) show that $\mu = \frac{3}{4}$

(4)

For parts (c) and (d), you are not required to do any further calculations.

Brick P is now removed from the plane and a much heavier brick Q is placed on the plane.

The coefficient of friction between Q and the plane is also $\frac{3}{4}$

(c) Explain briefly why brick Q will remain at rest on the plane.

(1)

Brick Q is now projected with speed $0.5\,\text{m}\,\text{s}^{-1}$ down a line of greatest slope of the plane.

Brick Q is modelled as a particle.

Using the model,

(d) describe the motion of brick Q, giving a reason for your answer.

(2)

DO NOT WRITE IN THIS AREA
DO NOT WRITE IN THIS AREA
DO NOT WRITE IN THIS AREA

DO NOT WRITE IN THIS AREA
DO NOT WRITE IN THIS AREA
DO NOT WRITE IN THIS AREA

Question 1 continued

Question 1 continued

DO NOT WRITE IN THIS AREA
DO NOT WRITE IN THIS AREA
DO NOT WRITE IN THIS AREA

DO NOT WRITE IN THIS AREA
DO NOT WRITE IN THIS AREA
DO NOT WRITE IN THIS AREA

Question 1 continued

(Total for Question 1 is 9 marks)

2. A particle P moves with acceleration $(4\mathbf{i} - 5\mathbf{j})\,\mathrm{m\,s^{-2}}$

At time $t = 0$, P is moving with velocity $(-2\mathbf{i} + 2\mathbf{j})\,\mathrm{m\,s^{-1}}$

(a) Find the velocity of P at time $t = 2$ seconds.

(2)

At time $t = 0$, P passes through the origin O.

At time $t = T$ seconds, where $T > 0$, the particle P passes through the point A.

The position vector of A is $(\lambda\mathbf{i} - 4.5\mathbf{j})$m relative to O, where λ is a constant.

(b) Find the value of T.

(4)

(c) Hence find the value of λ

(2)

DO NOT WRITE IN THIS AREA
DO NOT WRITE IN THIS AREA
DO NOT WRITE IN THIS AREA

DO NOT WRITE IN THIS AREA
DO NOT WRITE IN THIS AREA
DO NOT WRITE IN THIS AREA

Question 2 continued

(Total for Question 2 is 8 marks)

3. (i) At time t seconds, where $t \geqslant 0$, a particle P moves so that its acceleration $\mathbf{a}\,\mathrm{m\,s^{-2}}$ is given by

$$\mathbf{a} = (1 - 4t)\mathbf{i} + (3 - t^2)\mathbf{j}$$

At the instant when $t = 0$, the velocity of P is $36\mathbf{i}\,\mathrm{m\,s^{-1}}$

(a) Find the velocity of P when $t = 4$

(3)

(b) Find the value of t at the instant when P is moving in a direction perpendicular to $\mathbf{i}$

(3)

(ii) At time t seconds, where $t \geqslant 0$, a particle Q moves so that its position vector $\mathbf{r}$ metres, relative to a fixed origin O, is given by

$$\mathbf{r} = (t^2 - t)\mathbf{i} + 3t\mathbf{j}$$

Find the value of t at the instant when the speed of Q is $5\,\mathrm{m\,s^{-1}}$

(6)

DO NOT WRITE IN THIS AREA
DO NOT WRITE IN THIS AREA
DO NOT WRITE IN THIS AREA

DO NOT WRITE IN THIS AREA
DO NOT WRITE IN THIS AREA
DO NOT WRITE IN THIS AREA

Question 3 continued

Question 3 continued

DO NOT WRITE IN THIS AREA
DO NOT WRITE IN THIS AREA
DO NOT WRITE IN THIS AREA

DO NOT WRITE IN THIS AREA
DO NOT WRITE IN THIS AREA
DO NOT WRITE IN THIS AREA

Question 3 continued

(Total for Question 3 is 12 marks)

4.

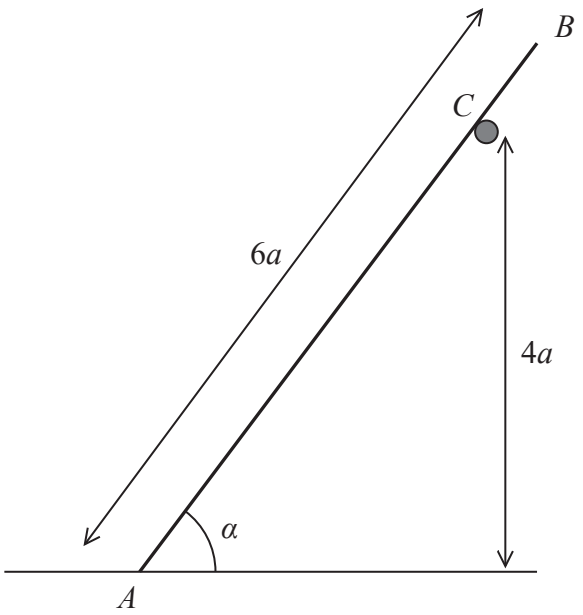

Figure 1

A ladder AB has mass M and length $6a$.

The end A of the ladder is on rough horizontal ground.

The ladder rests against a fixed smooth horizontal rail at the point C.

The point C is at a vertical height $4a$ above the ground.

The vertical plane containing AB is perpendicular to the rail.

The ladder is inclined to the horizontal at an angle α, where $\sin\alpha = \frac{4}{5}$, as shown in Figure 1.

The coefficient of friction between the ladder and the ground is μ.

The ladder rests in limiting equilibrium.

The ladder is modelled as a uniform rod.

Using the model,

(a) show that the magnitude of the force exerted on the ladder by the rail at C is $\frac{9Mg}{25}$

(3)

(b) Hence, or otherwise, find the value of μ.

(7)

DO NOT WRITE IN THIS AREA
DO NOT WRITE IN THIS AREA
DO NOT WRITE IN THIS AREA

DO NOT WRITE IN THIS AREA
DO NOT WRITE IN THIS AREA
DO NOT WRITE IN THIS AREA

Question 4 continued

Question 4 continued

DO NOT WRITE IN THIS AREA
DO NOT WRITE IN THIS AREA
DO NOT WRITE IN THIS AREA

DO NOT WRITE IN THIS AREA
DO NOT WRITE IN THIS AREA
DO NOT WRITE IN THIS AREA

Question 4 continued

(Total for Question 4 is 10 marks)

5.

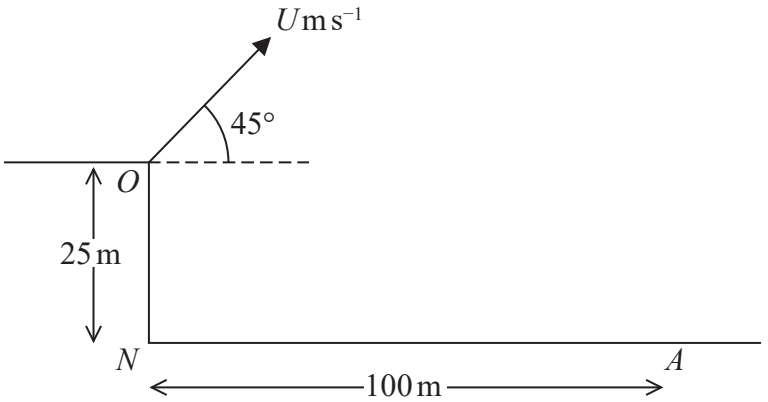

Figure 2

A small ball is projected with speed U m s^{-1} from a point O at the top of a vertical cliff.

The point O is 25 m vertically above the point N which is on horizontal ground.

The ball is projected at an angle of 45° above the horizontal.

The ball hits the ground at a point A, where $AN = 100$ m, as shown in Figure 2.

The motion of the ball is modelled as that of a particle moving freely under gravity.

Using this initial model,

(a) show that $U = 28$

(6)

(b) find the greatest height of the ball above the horizontal ground NA.

(3)

In a refinement to the model of the motion of the ball from O to A, the effect of air resistance is included.

This refined model is used to find a new value of U.

(c) How would this new value of U compare with 28, the value given in part (a)?

(1)

(d) State one further refinement to the model that would make the model more realistic.

(1)

DO NOT WRITE IN THIS AREA
DO NOT WRITE IN THIS AREA
DO NOT WRITE IN THIS AREA

DO NOT WRITE IN THIS AREA
DO NOT WRITE IN THIS AREA
DO NOT WRITE IN THIS AREA

Question 5 continued

Question 5 continued

DO NOT WRITE IN THIS AREA
DO NOT WRITE IN THIS AREA
DO NOT WRITE IN THIS AREA

DO NOT WRITE IN THIS AREA
DO NOT WRITE IN THIS AREA
DO NOT WRITE IN THIS AREA

Question 5 continued

Question 5 continued

(Total for Question 5 is 11 marks)

TOTAL FOR MECHANICS IS 50 MARKS

DO NOT WRITE IN THIS AREA
DO NOT WRITE IN THIS AREA
DO NOT WRITE IN THIS AREA